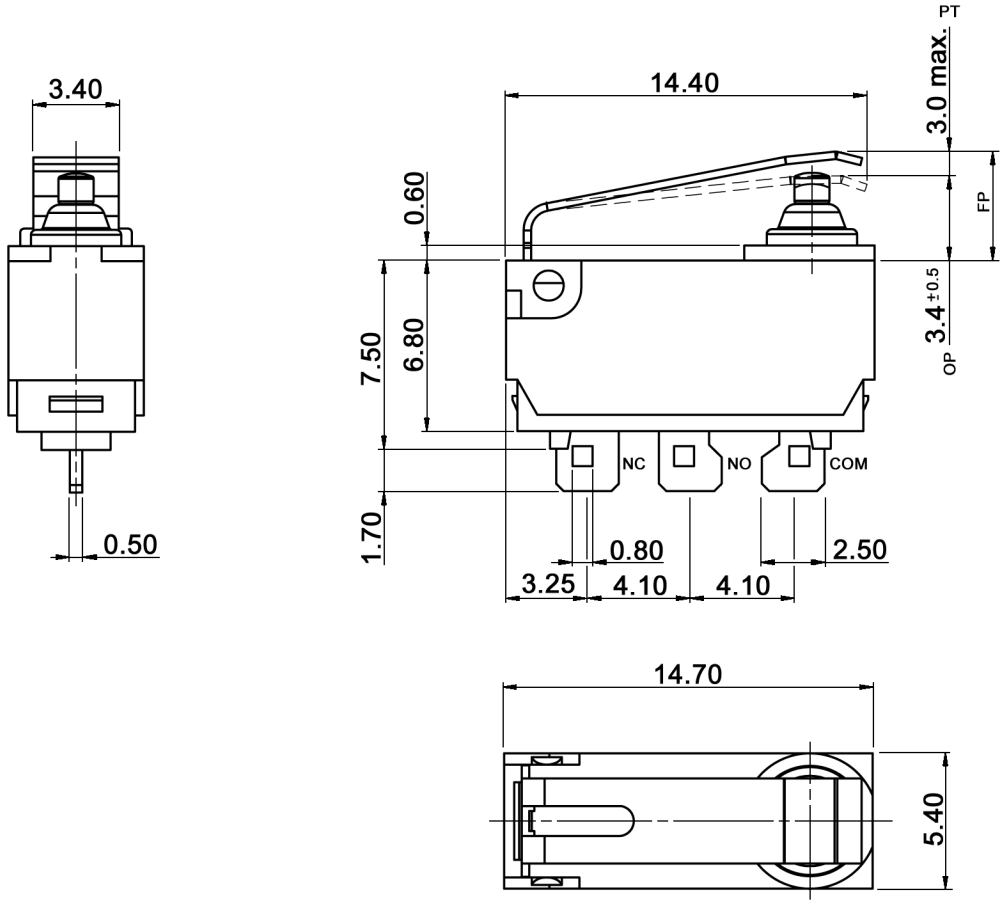

Specifications:

Contact rating:	0.1 A, 48 V DC, 125/250 V AC 3 A, 12 V DC µ40T85 1E5
Insulation resistance:	100 MOhm min. at 500 V DC for 1 minute +/-5 sec.
Dielectric strength:	1000 V (50/60 Hz, 10 mA) for 1 minute +/-5 sec.
Operating temperature:	-40°C to +85°C
Mechanical life:	500 000 cycles
Electrical life:	100 000 cycles
Operating force:	220 gf max.
Release force:	30 gf min.
Soldering conditions:	iron method: 350 +/-5°C, 3 +/-0.5 sec.
Differential travel:	0.5 mm max.
Over travel:	0.8 mm min.
Sealing protection:	IP67
Material:	Cover / case: PA Plunger: POM Terminals: Cu alloy, silver plated Moving plate: Cu alloy, silver plated Internal lever: SUS Contact: silver alloy Lever: SUS Gasket: silicone rubber

CIRCUIT DIAGRAM

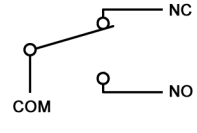

Compliance: RohS III (2015/863/EU)

Tolerances: ±0.40 mm			Date	Name	DM-DW 1 L 01 S
			02/20	dr	
			knitter-switch	30 43 59	Page 1/1
Modifications	Date	Name			